FR-7M3016BT-24V

Industrial L2+ Managed 16-port 10/100/1000Base-TX (PoE++) Ethernet Switch with Redundant 24VDC Power Inputs



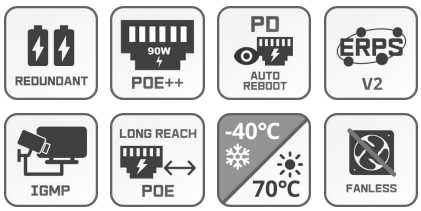

Main Features

Layer 2+ Features

- ERPSv2 redundant ring (<20ms) & STP/RSTP/MSTP
- 802.1Q VLAN, QinQ, and GVRP
- Dynamic LACP and static trunking
- IGMP Snooping v1/v2/v3 and Fast Leave
- QoS rate limiting, CoS, and 802.1p priority
- IPv4 static routing & VLAN interfaces

Software Management

- WebGUI, CLI, and NMS management
- SNMPv1/v2c/v3, LLDP, and SNTP
- NDAA & RoHS compliant
- Port mirroring and HTTP firmware updates
- Modbus TCP/RTU & serial protocol conversion

Security

- IEEE 802.1X and RADIUS authentication
- MAC/IP-based ACL
- DHCP Snooping with Option 82
- SSHv2 and TLSv1.2 secure access

PoE Functions

- 802.3bt PoE 90W per port
- PoE scheduling / Auto PD reboot
- Long reach PoE 250m, data rate at 10Mbps
- PoE budget & usage threshold monitoring

Industrial Features

- Operating temperature -40°C to +75°C
- Redundant 24VDC power inputs / Alarm relay
- High ESD/surge protection / Fanless
- DIP switch (RSTP / VLAN / SFP speed)
- NDAA & RoHS compliant

CE FC

Protected by hardware warranty
Advance replacement. Global coverage.

View policy on Fiberroad's website.

Product Specifications

FR-7M3016BT-24V

Product	FR-7M3016BT-24V
Interface	
RJ45 Ports	16x10/100/1000BASE-T
Console	1x RJ45-to-RS232 Serial Port(115200)
DIP Switch	RSTP; VLAN ; SFP speed
Electrical and Mechanical	
Input Voltage	Dual 24VDC
Power Consumption	14 Watts Max (without PoE load)
PoE Ports	Port 1 to 16 IEEE802.3af/at/bt
PoE Power Supply Type	End-span
Power Supply Pin	1/2(+), 3/6(-) or 4/5(+), 7/8(-)
Max Power Per Port	90W
Max. PoE Power Budget	120W
Surge Protection	±6kV DC, ±6kV RJ45
Enclosure	IP40 aluminum case
Dimension	160 x 132 x 70mm, 1.46kg
Standards	
IEEE 802.3	10BaseT
IEEE 802.3u	100BaseT(X) and 100BaseFX
IEEE 802.3ab	1000BaseT(X)
IEEE 802.3x	flow control
IEEE 802.1p	Class of Service
IEEE 802.1Q	VLAN Tagging
IEEE 802.1x	Authentication
IEEE 802.3ad	Port Trunk with LACP
IEEE 802.1D	Spanning Tree Protocol

Product Specifications

FR-7M3016BT-24V

Product	FR-7M3016BT-24V
Standards	
IEEE 802.1w	Rapid Spanning Tree Protocol
IEEE 802.1s	Multiple Spanning Tree Protocol
IEEE 802.1ad	Q-in-Q tunneling
Switching	
Switch Architecture	Store-and-Forward
Switch Fabric	56Gbps/non-blocking
Forwarding Rate	23.8Mpps(64-byte packet size)
Packet Buffer Size	4 Mbits
Maximum Packet Length	10K bytes
MAC Address Table	8K entries, automatic source address learning and aging
Flow Control	IEEE 802.3x pause frame for full duplex, Back pressure for half duplex
Software Features	
Port Configuration	Port(Admin Status) disable/enable Copper Port: Auto-negotiation 10/100/1000Mbps full and half duplex mode selection Fiber Port: 100M/1000M speed selection Flow Control disable/enable Power saving(EEE) disable/enable Each port description
Port Status	Display each ports' speed duplex mode, link status, flow control status, auto negotiation status,Fiber Port Information, Port Traffic
Port Mirroring	Source Ingress/ Egress Port/ Both, Many-to-1 monitor
VLAN	Up to 4K VLAN groups, out of 4094 VLAN IDs IEEE 802.1Q tag-based VLAN IEEE 802.1AD Q-in-Q tunneling(Double VLAN) GVRP(Generic VLAN Registration Protocol)
Link Aggregation	IEEE 802.3ad LACP/Static trunk Supports 6 trunk groups with 4 ports per trunk
Link Aggregation	IEEE 802.1D Spanning Tree Protocol IEEE 802.1w Rapid Spanning Tree Protocol IEEE 802.1s Multiple Spanning Tree Protocol

Product Specifications

FR-7M3016BT-24V

Product	FR-7M3016BT-24V
Standards	
Multicast	Dynamic/Static Multicast groups IGMP Snooping v1,2,3 Port-based IGMP Snooping Fast Leave GMP Querier
Rate Limitation	Per Port Rate Limitation Ingress: 16-1000000 kbps/Egress: 16-1000000 kbps
Ring	ITU-T G.8032 ERPS, Recovery time<20ms
QoS	Traffic classification based, strict priority and WRR 8-level priority for switching -Port number -802.1p priority -802.1Q VLAN tag -DSCP/TOS field in IP Packet
ACL	IP-based ACL/MAC-based ACL ACL based on: -MAC Address -IP Address -Ethertype -Protocol Type -VLAN ID -DSCP -802.1p Priority
Security	Port Security Static MAC address IEEE 802.1x port-based network access control RADIUS authentication DHCP Snooping, DHCP option 82
PoE Management Functions (PoE Model)	
PoE System Management	PoE Port status monitoring Total PoE power budget control PoE usage threshold and temperature threshold PoE port Priority PoE mode(PoE/PoE+/PoE++) PD reboot(Zero Traffic Duration)
PoE Schedule	Absolute/Periodic Mode
Layer 3 Functions	
IP Interfaces	Max. 8 VLAN interfaces
Routing Table	Max.32 routing entries
Routing	IPv4 software static routing

Product Specifications

FR-7M3016BT-24V

Product	FR-7M3008P-24V
Management	
Basic Management Interface	Console; Telnet; Web browser; SNMPv1/v2c
Secure Management Interface	SSHv2, TLSv1.2, SNMPv3
System Management	Firmware Upgrade by HTTP protocol through Ethernet network Configuration upload/download through HTTP Remote syslog, System log LLDP protocol, SNTP PREVIEW NMS Alarm(Relay, Led, Temperature, Trap, Power)
Environmental	
Operating Temperature	-40°Cto +75°C(-40 to 167 °F)
Storage Temperature	-40°Cto +85°C(-40 to 185 °F)
Operating Humidity	5%~95% (non-condensing)
MTBF	907,476 hours @ Telcordia SR-332 Standard
Cooling	Passive Cooling, Fanless Design
Noise Level	0 dBA
Regulatory & Warranty	
ISO	Manufactured in ISO-9001facility
Safety	IEC62368-1:2020+A11:2020
EMI	FCC Part 15B Class A, IEC 61000-3-2
EMS	IEC61000-4-2 ESD: Contact:±8kV, Air:±15kV IEC61000-4-5 Surge: Power: ±6kV; RJ45:±4kV/±6kV(PoE)
Shock	IEC 60068-2-27
Free Fall	IEC 60068-2-32
Vibration	IEC 60068-2-6
Environmental	RoHS 2011/65/EU Annex II(EU)

Product Specifications

Dimension (Unit: mm)

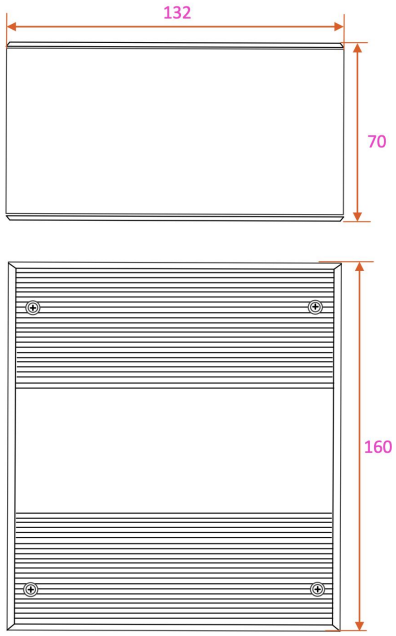

Ordering Information

Available Model	Description	Input Voltage	Operating Temp.
FR-7M3016BT-24V	Industrial L2+ Managed 16-port 10/100/1000Base-TX (PoE++) Ethernet Switch with Redundant 24VDC Power Inputs	Dual 24VDC	-40 to +75°C

Optional Accessories (to be purchased separately)	
Power Supply	Please select your power supply on our Power Supplies & Adapters page for details.
SFP Optical Transceiver	Please select your SFP on our SFP Modules page for details.

Package Contents	
Device	1 x Industrial Ethernet Switch
Cable	1 x DB9 female to RJ45
Installation Kit	1 x DIN-Rail Clip

Specifications are subject to change without notice. Fiberroad Technology Co., Ltd. makes no warranties, either expressed or implied, regarding the information contained herein. Please contact us for the latest product information.

© Fiberroad Technology Co., Ltd. All rights reserved. | Oct 2026