FR-7M3208S • FR-7M3208SP • FR-7M3208SBT

Industrial L2+ Managed 8-port 10/100/1000Base- TX (Non-PoE/PoE+/PoE++) + 2-port 100/1000Base-SFP + 2-port RS485/422/232 Serial Switch with Redundant DC Power Inputs

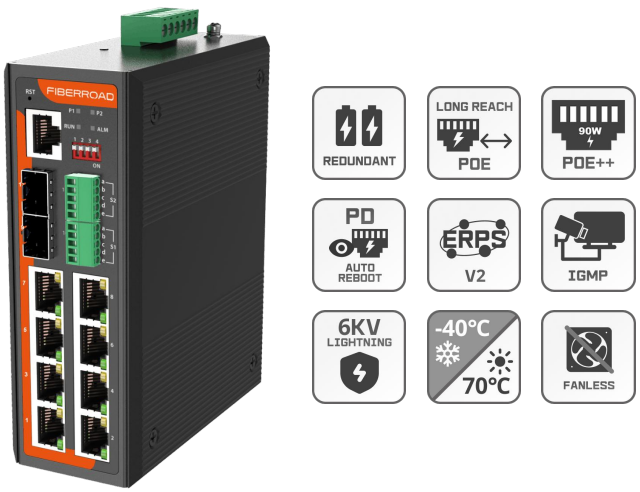

Layer 2+ Features

- ERPSv2 redundant ring (<20ms) & STP/RSTP/MSTP
- 802.1Q VLAN, QinQ, and GVRP
- Dynamic LACP and static trunking
- IGMP Snooping v1/v2/v3 and Fast Leave
- QoS rate limiting, CoS, and 802.1p priority
- IPv4 static routing & VLAN interfaces

Software Management

- WebGUI, CLI, and NMS management
- SNMPv1/v2c/v3, LLDP, and SNTP
- Port mirroring and HTTP firmware updates
- Modbus TCP/RTU & serial protocol conversion

Security

- IEEE 802.1X and RADIUS authentication
- MAC/IP-based ACL
- DHCP Snooping with Option 82
- SSHv2 and TLSv1.2 secure access

PoE Functions*

- 802.3at/bt PoE (30W / 90W per port)
- PoE scheduling / Auto PD reboot
- Long reach PoE 250m, data rate at 10Mbps
- PoE budget & usage threshold monitoring

Hardware

- Operating temperature -40°C to +75°C
- Redundant DC power inputs / Alarm relay
- High ESD/surge protection / Fanless
- DIP switch (RSTP / VLAN / SFP speed)
- NDAA & RoHS compliant

CE FC

Protected by hardware warranty
Advance replacement. Global coverage.

View policy on Fiberroad's website.

Product Specifications

FR-7M3208S • FR-7M3208SP • FR-7M3208SBT

Product		FR-7M3208S	FR-7M3208SP	FR-7M3208SBT
Interface				
RJ45 Ports		8x10/100/1000BASE-T		
SFP Ports		2x100/1000BASE-X		
Console		1x RJ45-to-RS232 Serial Port(115200)		
Serial Communication	Ports	2 x RS485/422/232		
	Signals	RS-232: a:TXD、b:RXD、c:Na、d:Na、e:GND RS-422: a:T+、b:T-、c:R+、d:R-、e:GND RS-485: :a: Na、b: Na、c:D+、d:D-、e:GND		
	Baud rate	2400-115200bps		
	Terminal	5-Pin Terminal		
	Load Capacity	RS-485/422 supports 128 points polling environment		
	Movement	RS-485 adopts automatic data flow control technology		
	Interface Protection	RS-232 15KV static protection Isolation voltage 2KV, electrostatic protection 15KV		
Dip Switch		RSTP / VLAN / SFP speed		
Electrical and Mechanical				
Input Voltage		Dual 9-56VDC	Dual 48-56VDC	Dual 52-56VDC
Power Consumption		10 Watts Max (without PoE load)		
PoE Ports		\	Port 1 to 8 IEEE802.3 af/at	Port 1 to 8 IEEE802.3 af/at/bt
PoE Power Supply Type		\	End-span	End-span
Power Supply Pin			1/2(+), 3/6(-)	1/2(+), 3/6(-) or 4/5(+), 7/8(-)
Max Power Per Port		\	30W	90W
Max. PoE Power Budget		\	240W	470W
Surge Protection		±6kV DC, ±4kV RJ45	±6kV DC, ±6kV RJ45	

Product Specifications

FR-7M3208S • FR-7M3208SP • FR-7M3208SBT

Product	FR-7M3208S	FR-7M3208SP	FR-7M3208SBT
Interface			
Enclosure	IP40 Aluminum case		
Dimension	138 x 108 x 49mm, 0.7kg		
Standards			
IEEE 802.3	10BaseT		
IEEE 802.3u	100BaseT(X) and 100BaseFX		
IEEE 802.3ab	1000BaseT(X)		
IEEE 802.3z	1000BaseSX/LX/LHX/ZX		
IEEE 802.3x	Flow Control		
IEEE802.3az	Energy Efficient Ethernet		
IEEE 802.1D	Spanning Tree Protocol		
IEEE 802.1w	Rapid Spanning Tree Protocol		
IEEE 802.1s	Multiple Spanning Tree Protocol		
IEEE 802.1Q	VLAN Tagging		
IEEE 802.1ad	Q-in-Q tunneling		
IEEE 802.1p	Class of Service		
IEEE 802.3ad	Port Trunk with LACP		
IEEE 802.1X	Authentication		
IEEE 802.1ab	Link Layer Discovery Protocol		
Switching			
Switch Architecture	Store-and-Forward		
Switch Fabric	36Gbps/non-blocking		
Forwarding Rate	14.88Mpps(64-byte packet size)		
Packet Buffer Size	4 Mbits		

Product Specifications

FR-7M3208S • FR-7M3208SP • FR-7M3208SBT

Product	FR-7M3208S	FR-7M3208SP	FR-7M3208SBT
Switching			
Maximum Packet Length	10K bytes		
MAC Address Table	8K entries, automatic source address learning and aging		
Flow Control	IEEE 802.3x pause frame for full duplex, Back pressure for half duplex		
Software Features			
Port Configuration	Port(Admin Status) disable/enable Copper Port: Auto-negotiation 10/100/1000Mbps full and half duplex mode selection Fiber Port: 100M/1000M speed selection Flow Control disable/enable Power saving(EEE) disable/enable Each port description		
Port Status	Display each ports' speed duplex mode, link status, flow control status, auto negotiation status, Fiber Port Information, Port Traffic		
Port Mirroring	Source Ingress/ Egress Port/ Both, Many-to-1 monitor		
VLAN	Up to 4K VLAN groups, out of 4094 VLAN IDs IEEE 802.1Q tag-based VLAN IEEE 802.1AD Q-in-Q tunneling (Double VLAN) GVRP(Generic VLAN Registration Protocol)		
Link Aggregation	IEEE 802.3ad LACP/Static trunk Supports 6 trunk groups with 4 ports per trunk		
Spanning Tree Protocol	IEEE 802.1D Spanning Tree Protocol IEEE 802.1w Rapid Spanning Tree Protocol IEEE 802.1s Multiple Spanning Tree Protocol		
Multicast	Dynamic/Static Multicast groups IGMP Snooping v1,2,3 Port-based IGMP Snooping Fast Leave GMP Querier		
Rate Limitation	Per Port Rate Limitation Ingress: 16-1000000 kbps/Egress: 16-1000000 kbps		
Ring	ITU-T G.8032 ERPS, Recovery time<20ms		
QoS	Traffic classification based, strict priority and WRR 8-level priority for switching -Port number -802.1p priority -802.1Q VLAN tag -DSCP/TOS field in IP Packet		

Product Specifications

FR-7M3208S • FR-7M3208SP • FR-7M3208SBT

Product	FR-7M3208S	FR-7M3208SP	FR-7M3208SBT
Software Features			
ACL	IP-based ACL/MAC-based ACL ACL based on: -MAC Address -IP Address -Ethertype -Protocol Type -VLAN ID -DSCP -802.1p Priority		
Security	Port Security Static MAC address IEEE 802.1x port-based network access control RADIUS authentication DHCP Snooping, DHCP option 82		
PoE Management Functions			
PoE System Management	PoE Port status monitoring Total PoE power budget control PoE usage threshold and temperature threshold PoE port Priority PoE mode(PoE/PoE+/PoE++) PD reboot(Zero Traffic Duration)		
PoE Schedule	Absolute/Periodic Mode		
Layer 3 Functions			
IP Interfaces	Max. 8 VLAN interfaces		
Routing Table	Max.32 routing entries		
Routing	IPv4 software static routing		
Management			
Basic Management Interface	Console; Telnet; Web browser; SNMPv1/v2c		
Secure Management Interface	SSHv2, TLSv1.2, SNMPv3		
System Management	Firmware Upgrade by HTTP protocol through Ethernet network Configuration upload/download through HTTP Remote syslog, System log LLDP protocol, SNTP PREVIEW NMS Alarm(Relay, Led, Temperature, Trap, Power)		

Product Specifications

FR-7M3208S • FR-7M3208SP • FR-7M3208SBT

Product	FR-7M3208S	FR-7M3208SP	FR-7M3208SBT
Environmental			
Operating Temperature	-40°C~75°C (-40 to 167°F)		
Storage Temperature	-40°C~85°C (-40 to 185°F)		
Operating Humidity	5%~95% (non-condensing)		
MTBF	907,476 hours @ Telcordia SR-332 Standard		
Cooling	Passive Cooling, Fanless Design		
Noise Level	0 dBA		
Regulatory			
ISO	Manufactured in ISO-9001facility		
Safety	IEC62368-1:2020+A11:2020		
EMI	FCC Part 15B Class A, IEC 61000-3-2		
EMS	IEC61000-4-2 ESD: Contact:±8kV, Air:±15kV IEC61000-4-5 Surge: Power: ±6kV; RJ45:±4kV/±6kV(PoE)		
Shock	IEC 60068-2-27		
Free Fall	IEC 60068-2-32		
Vibration	IEC 60068-2-6		
Environmental	RoHS 2011/65/EU Annex II(EU)		

Product Specifications

Dimension (Unit: mm)

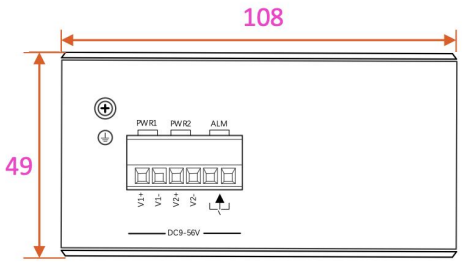

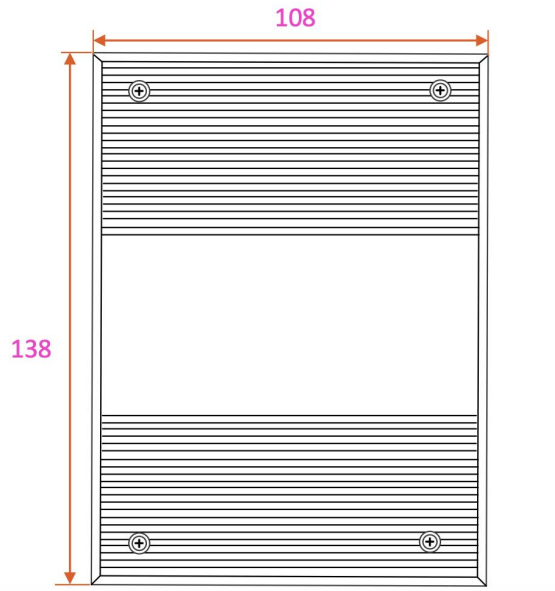

Ordering Information

Available Model	Description	Input Voltage	Operating Temp.
FR-7M3208S	Industrial L2+ Managed 8-port 10/100/1000Base-TX + 2-port 100/1000Base-SFP + 2-port RS485/422/232 Serial Switch with Redundant DC Power Inputs	Dual DC9-56V	-40 to +75°C
FR-7M3208SP	Industrial L2+ Managed 8-port 10/100/1000Base-TX (PoE+) + 2-port 100/1000Base-SFP + 2-port RS485/422/232 Serial Switch with Redundant DC Power Inputs	Dual DC48-56V	-40 to +75°C
FR-7M3208SBT	Industrial L2+ Managed 8-port 10/100/1000Base-TX (PoE++) + 2-port 100/1000Base-SFP + 2-port RS485/422/232 Serial Switch with Redundant DC Power Inputs	Dual DC52-56V	-40 to +75°C

Optional Accessories (to be purchased separately)	
Power Supply	Please select your power supply on our Power Supplies & Adapters page for details.
SFP Optical Transceiver	Please select your SFP on our SFP Modules page for details.

Product Specifications

Ordering Information

Package Contents	
Device	1 x Industrial Ethernet Switch
Cable	1 x DB9 female to RJ45
Installation Kit	1 x DIN-Rail Clip

Specifications are subject to change without notice. Fiberroad Technology Co., Ltd. makes no warranties, either expressed or implied, regarding the information contained herein. Please contact us for the latest product information.

© Fiberroad Technology Co., Ltd. All rights reserved. | Oct 2026